Green-Time Split Calculation Subsystem for Traffic Light Controllers

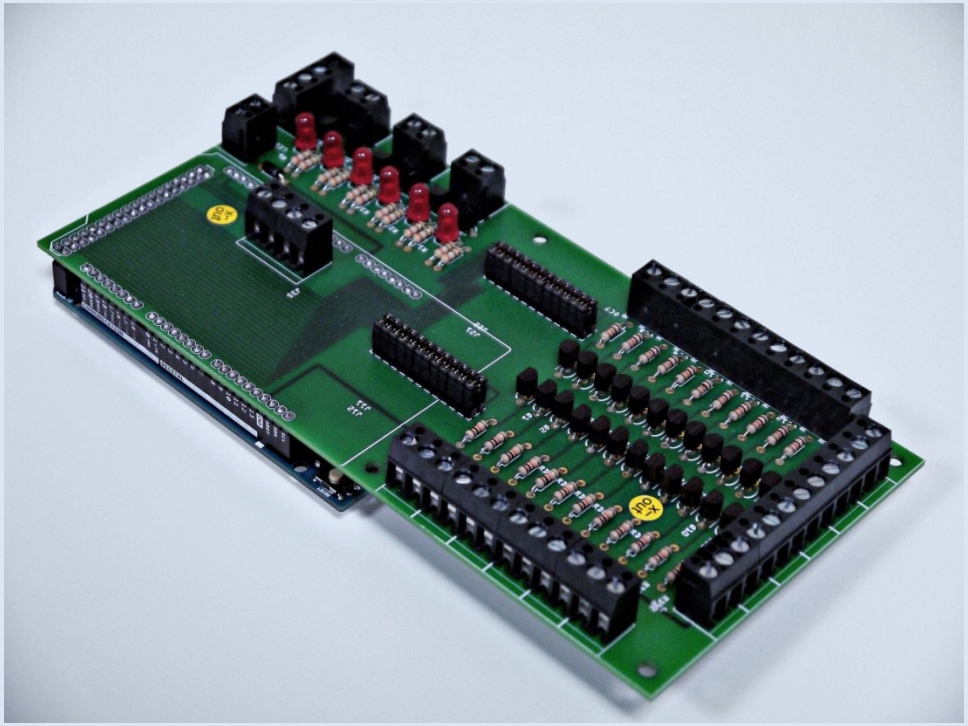

D-GCC – green-time split calculation subsystem designed to control isolated intersections with rapid traffic load changes.

MB Dukubu:

- developes, produces, installs and services the product, i. e. bares 100 % responsibility;
- every system is adapted to customer's needs, i.e. individualized.

D-GCC application fields:

- isolated traffic light controlled intersections;
- traffic light controlled intersections with rapid traffic flow change;
- intersections where fully-traffic-actuated algorithms are difficult to calibrate or need improvement.
- intersections with high speed approaches.

D-GCC is designed to:

- act as traffic responsive, self optimizing signal control for isolated intersections (like known algorithm – MOVA);
- increase traffic light controlled intersection adaptability to rapidly changing traffic loads;
- calculate and split green-times proportionally to real traffic loads.

D-GCC:

- Selects green-time splits according to traffic loads on-site by using distant local detectors.
- Sends switching times to traffic light controller (TLC), i.e. behaves as a master device leaving TLC for lamp switching and system monitoring functions.
- Fast up to 2 min calculation time.
- Phase skipping (partial traffic actuation) possible.
- Usage of historical (recorded) green-times when respective phase detectors are damaged.
- Operates with ANY manufacturer's traffic light controllers.

- Main parameters:
  - number of "local cycle-times" for green-time split calculation: up to 10;
  - evaluation period for green-time split calculation: 2-30 minutes (recommended);
  - number of phases: 6 max;
  - phase minimum times: yes, configurable;
  - inter-green times: must be same like in controller;
  - number of detectors: 4 per phase, 24 max;
  - detector monitoring time: yes, configurable;
  - time per vehicle for green-time calculation: yes, configurable;
  - historical phase times are recorded: every 10 minutes.

D-GCC algorithm advantages compared to Vehicle Actuation (VA)

- Flexibility when one or all intersection arms are highly saturated:
  - D-GCC always splits phase green-times proportionally to traffic loads;
  - VA uses pre-defined fixed phase green-time maximums.

- Stability at intersections with higher speed approaches (highways, country roads):
  - D-GCC gives calculated green-time which depends on average number of vehicles;
  - VA cuts green-time after minimum green-time if time gap between vehicles is exceeded, resulting in dangerous breaking and damaging of road surface at the STOP line.

- Robustness when detectors are damaged:
  - D-GCC uses historical (from the last day when detector was functional) phase green-times, that are recorded every 10 minutes;
  - VA uses pre-defined fixed phase green-time maximums.

- Set up easiness:
  - D-GCC set up takes just several minutes, controller programs are standardized, not depending on number of stages or controller manufacturer;
  - VA set up requires a lot of traffic engineering skills and effort.

- Commissioning and calibration:
  - D-GCC needs minimum commissioning (define maximum “local cycle-time” and time given per vehicle) and, as it is a self-optimizing algorithm, almost no calibration on-site;
  - VA commissioning and calibration require a lot of effort on-site.

Connection to traffic light controller and detectors

- Detectors to D-GCC can be connected:
  - as normally opened contacts: contact closed = detector on;
  - as low/high signals: input low = detector on.

- Open collector inputs commutate phases.

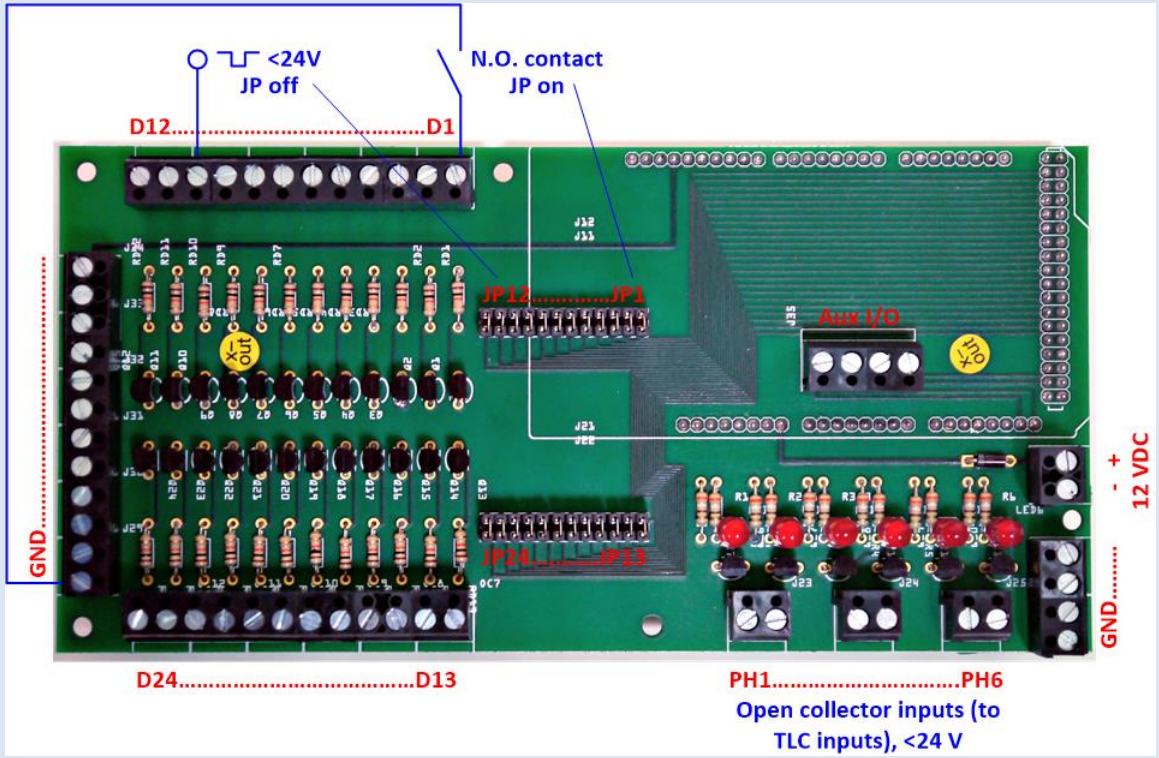

Fig. 1. D-GCC connections (red) and connection examples for detectors and TLC (blue)

Detector installation

- For best performance D-GCC detectors should be installed:
  - 70-150 m away from STOP line . Calculated distance [m] = 7 [s] x speed [m/s];
  - in case of short right/left-turners' lanes – at the beginning of the lane.
- D-GCC detectors are used for green-time split calculation, as well as for phase demands, push buttons including.
- Detector installation does not differ from those installed for VA applications.
- Detectors at STOP lines should not be used for D-GCC.

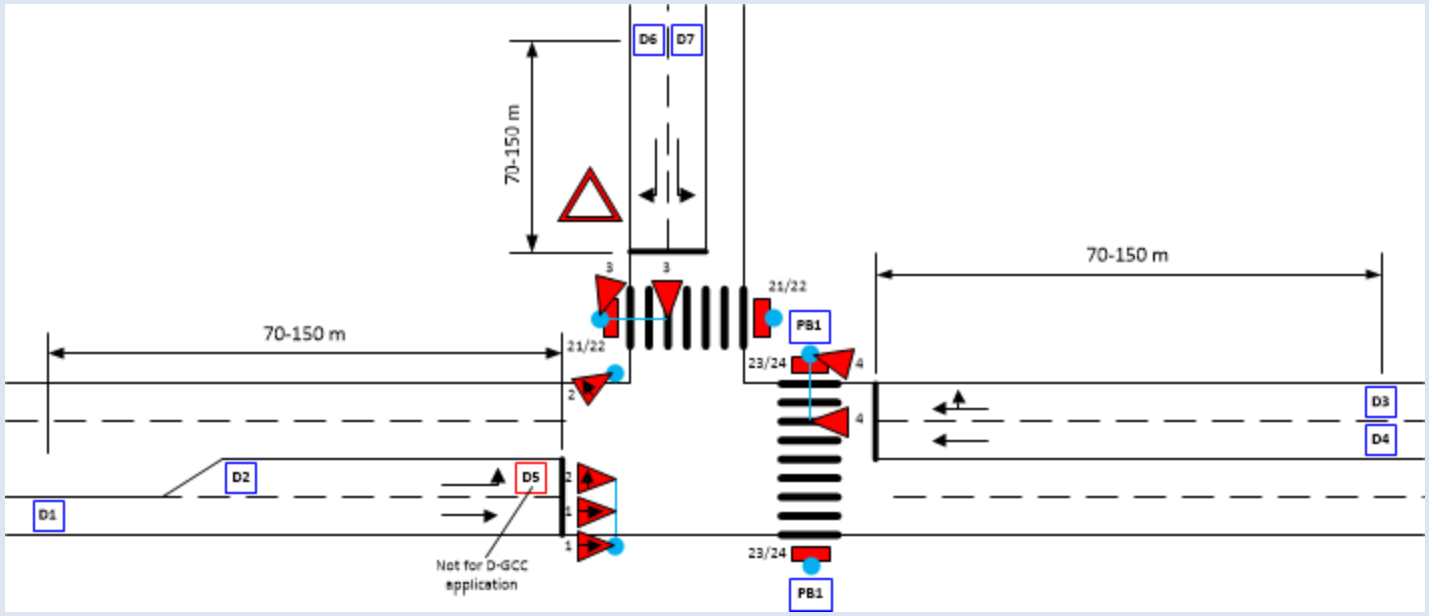

Fig. 2. D-GCC detector allocation

Control

- D-GCC runs its algorithm while TLC runs VA program demanding phases PH1 to PH6 with digital inputs INP1 to INP6.
- TLC inter-green matrix on signal group level must match D-GCC inter-green matrix on phase level.
- TLC VA phase maximums must be set to maximum “cycle-time” in D-GCC.

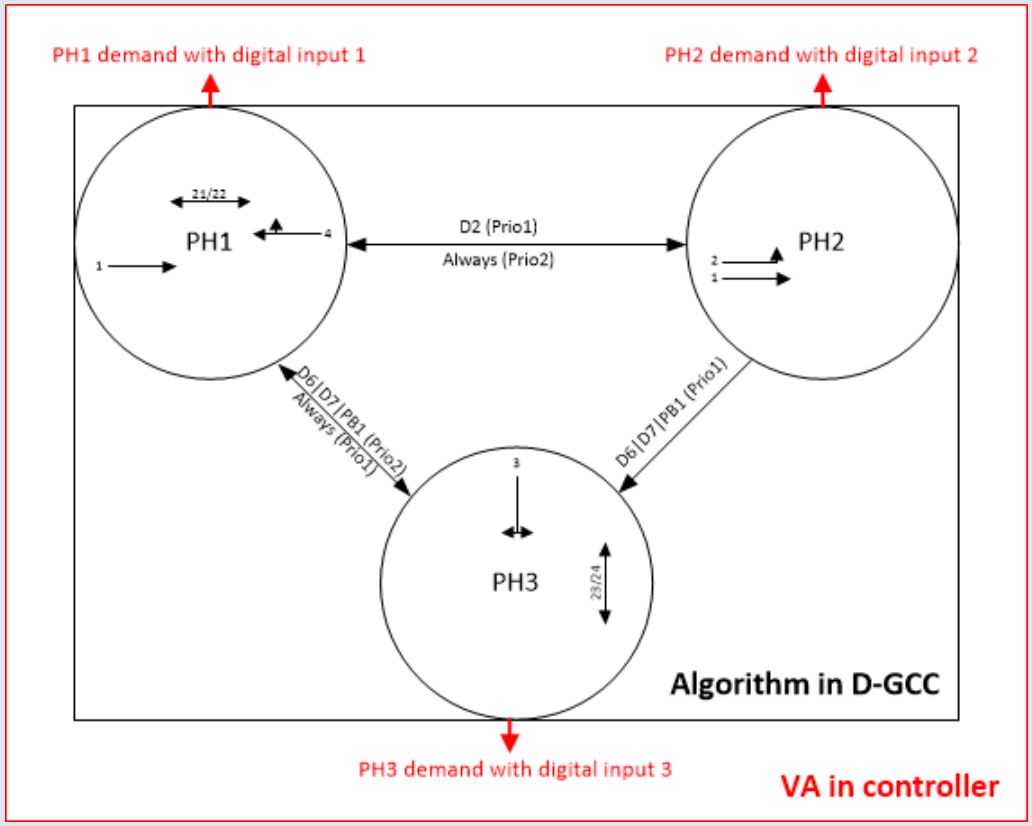

Fig. 3. Intersection control with D-GCC detectors